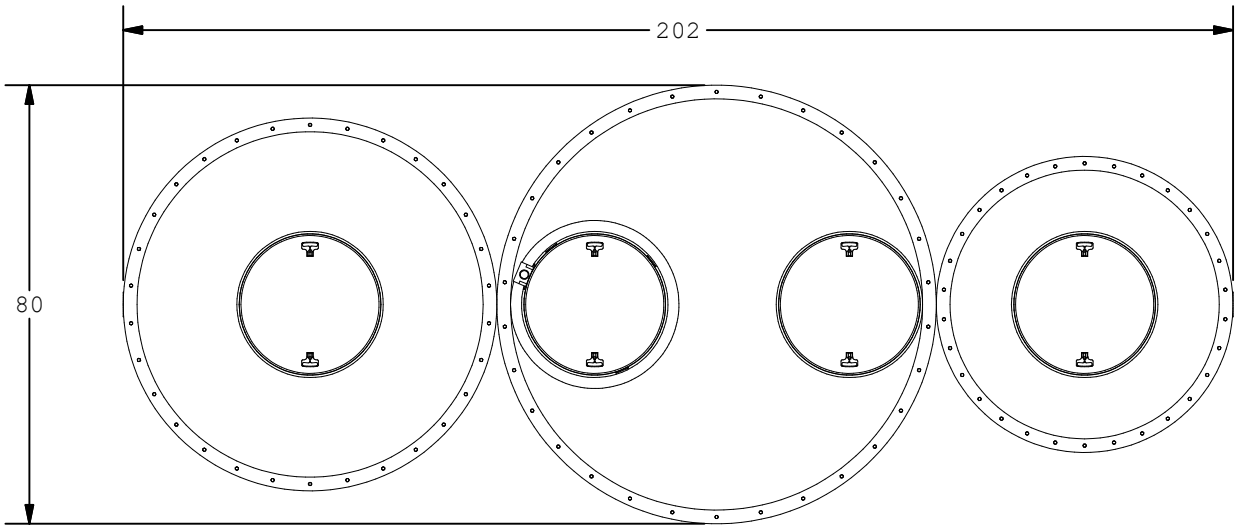

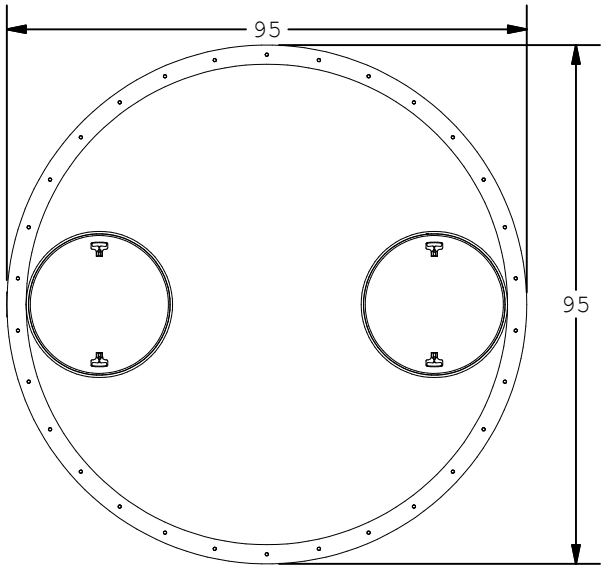

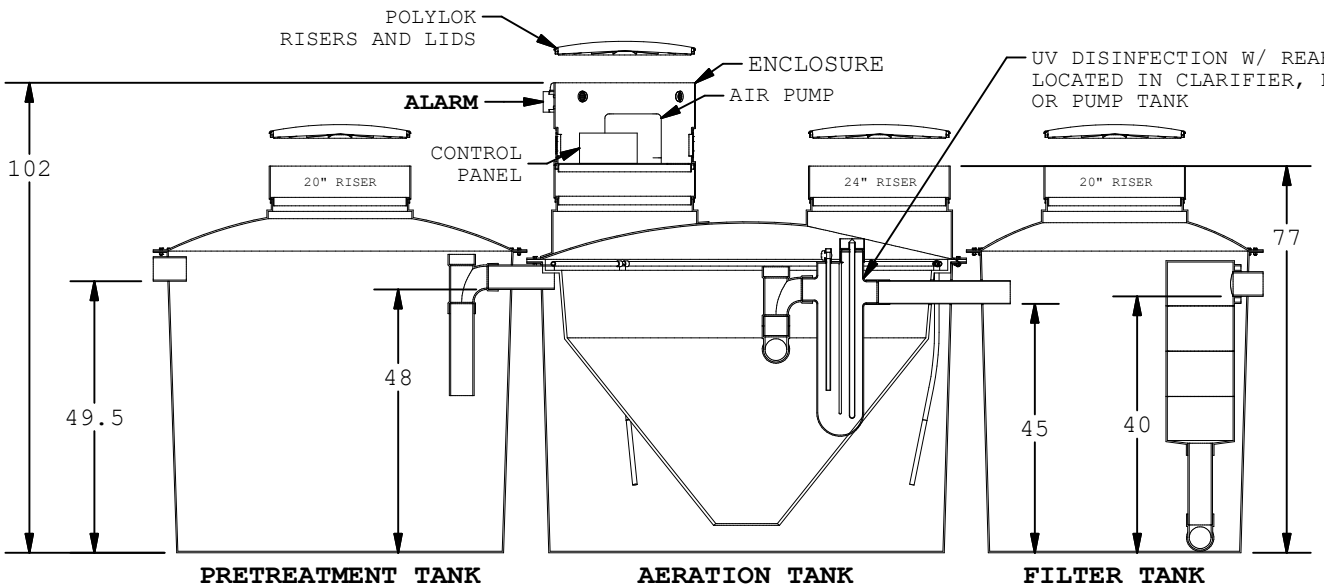

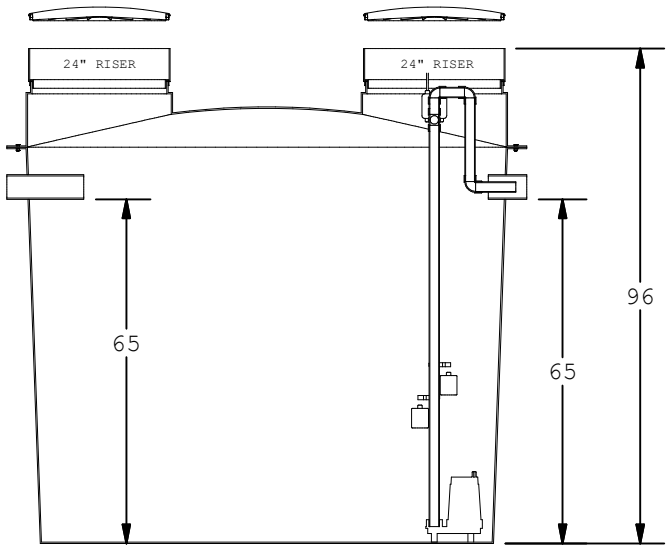

hydro-action
green from the ground up

WASTEWATER SOLUTIONS

PART DESCRIPTION: AP SERIES UV DISINFECTIOR SPRAY	TOLERANCES UNLESS OTHERWISE SPECIFIED FRACTIONS ±1/2" ANGLES ±1°	REV #:	SCALE: 1 / 35	DATE: 6/21/2019	DRAWN BY: Israel Debro	SHEET #: 1 OF 1
		DIMENSIONS ARE IN INCHES UNLESS OTHERWISE SPECIFIED		PART #: LAP-500_5+3+1600_SPRAY		