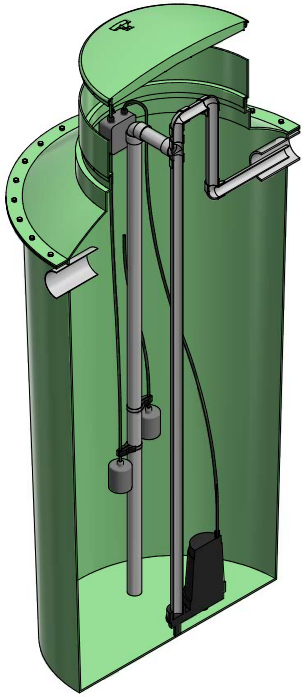

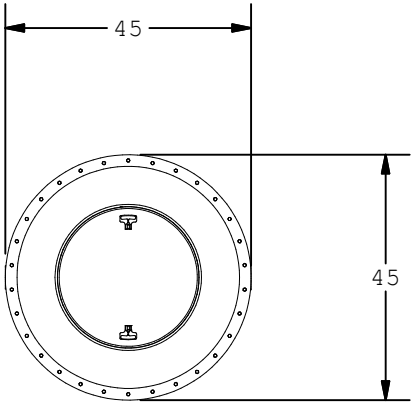

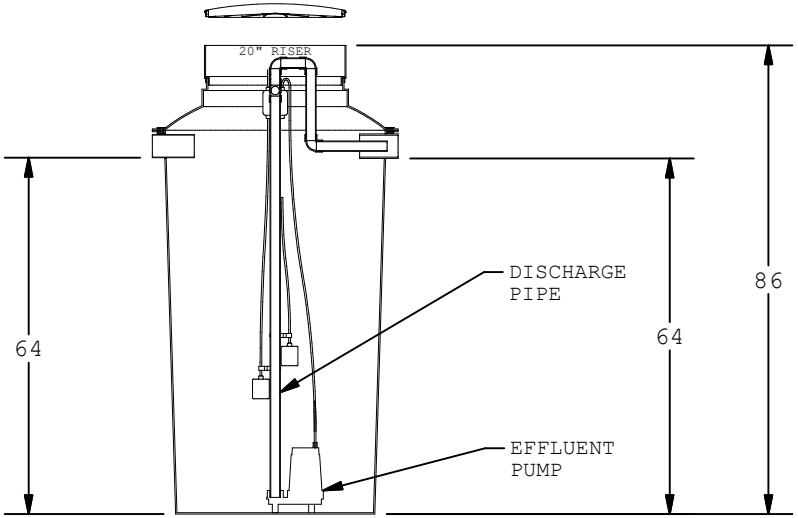

PUMP TANK

hydro action
green from the ground up

WASTEWATER
SOLUTIONS

PART DESCRIPTION:	TOLERANCES UNLESS OTHERWISE SPECIFIED	REV #:	SCALE:	DATE:	DRAWN BY:	SHEET #:
300 GALLON PUMP TANK	FRACTIONS ±1/2" | ANGLES ±1°	DIMENSIONS ARE IN INCHES UNLESS OTHERWISE SPECIFIED	1 / 35	9/28/2018	Israel Debro	1 OF 1
				PART #:		
				PP-300		